Transmate
1-800-426-9341
www.romac.com

MADE IN U.S.A

QuikValve Insertion Machine

QuikValve™

"When you are under pressure to install a valve in an operating line"

- 4", 6" or 8" installations in cast iron, ductile iron, A/C and some classes of PVC pipe
- Uses modern resilient gate technology
- Can be used in water lines with up to 150 psi ambient pressure
- Installed valve has the same number of turns as any other comparable valve in your system

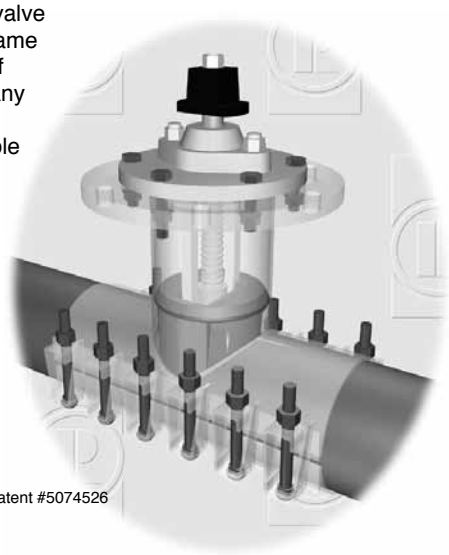

Patent #5074526

Material Specifications

QuikValve Tapping Sleeve

General: The sleeve is fabricated to assure a 360° seal around the pipe under working pressures up to 150 psi. (Test pressure: 225 psi.) It is designed to accommodate the equipment and fixtures necessary to drill and ream the pipe and install the QuikValve insertion valve without any interruption in water service.

Sleeve: ASTM A-36 steel.

Flange: A special flange is used that mates with the QuikValve installation equipment and insertion valve.

Neck: The neck is manufactured to precision tolerances that assure proper alignment, support, and sealing of the QuikValve insert.

Bolts and Nuts: High strength low alloy steel (Corten) bolts and nuts meeting AWWA standard C-111. Type 304 stainless steel bolts with SDC nuts are optional.

Gaskets: All gaskets are made of Styrene Butadiene Rubber (SBR) compounded for potable water service in accordance with ASTM D2000 3 BA715. The gaskets provide a positive 360° seal on the pipe and assure a tight, durable, and resilient seal at the pipe sleeve - valve insert junction.

Coating: The sleeve is lined and coated with fusion bonded epoxy.

Armors: Heavy gauge type 304 stainless steel armor plates are used to bridge the gap between the sleeve halves.

Lugs: Lugs on the sleeve are configured to properly align the sleeve halves during installation, provide a bolting surface, and assure a 360° seal. The lugs are designed to prevent excessive stress on the pipe, and minimize distortion of soft (PVC) pipe.

Material Specifications

QuikValve Valve Assembly

General: The valve assembly, when installed in a QuikValve sleeve, performs as a water control device with an effective shutoff of the flow of water. The valve is installed in the open position, under water pressure without any interruption of water service. The QuikValve gives a full unobstructed full flow waterway after installation.

Insert: The insert consists of a ductile iron casting coated with SBR rubber compounded for water service with a durometer of 55 Shore A. The insert seals on the inside diameter of the QuikValve sleeve neck and the lower half of the water main.

Valve Stem: The stem and nut assembly are in accordance with AWWA C-500-80, section 3.12.

Flange: A special flange, made of ASTM A-36 steel is used that holds the valve assembly together and acts to seal against the valve sleeve flange.

Gasket: The valve flange gasket is made of SBR rubber, compounded for water service in accordance with ASTM D2000 3 BA715, with a durometer of 70 Shore A. The gasket acts as the sealing interface between the valve flange and the sleeve flange.

Bolts and Nuts: Grade 3 Alloy steel, zinc plated for corrosion protection. Type 304 stainless steel bolts, nuts and washers are optional.

For more information on the QuikValve™ Machine, please contact your regional Romac/Transmate representative at 1-800-426-9341

Transmate
1-800-426-9341
www.romac.com

MADE IN U.S.A

QuikValve Insertion Machine

Installing the QuikValve is as easy as

1 • 2 • 3 • 4

1. Install the QuikValve sleeve

The QuikValve Sleeve supports and strengthens the pipe. The full all around gasket assures water containment for the life of the valve.

The sleeve acts as the valve body and is designed to withstand additional temporary stresses during the QuikValve installation.

Epoxy coated A-36 sleeve

Full all around gridded gasket with stainless steel armors

Corten or stainless steel bolts and nuts

2. Drill the pipe wall and remove the coupon

Drilling proceeds like a lateral tap. A coupon is removed from the top of the pipe. The temporary slide gate is used to control the water flow between the four installation steps.

Temporary slide gate

Drill bushing stabilizes the shell cutter

Works with A/C, cast iron, ductile iron and some classes of PVC pipe

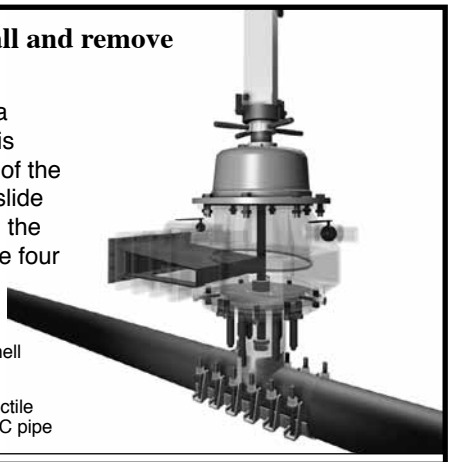

3. Ream the pipe

A ball nosed reamer cleans away any tuberculation and forms a smooth sealing surface for the QuikValve insert.

QuikValve Insertion Machine also doubles as a 3" to 12" lateral tapping machine

Reamer blades are M-4 tool steel

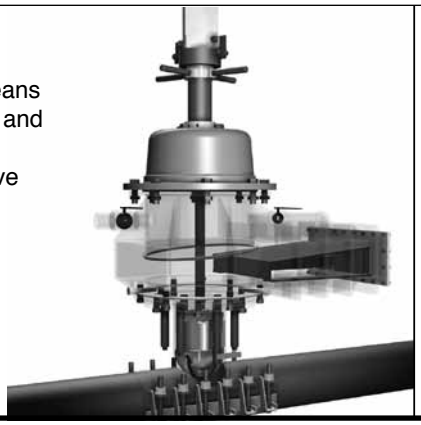

4. Insert the valve

The valve is pressed into the sleeve neck and bolted into place. Notice, the valve is inserted in the open position. You decide when to close the valve.

Spacer spool gives additional room for the valve insert before it is pressed into place

Remove the water caps and thread nuts onto insert flange bolts

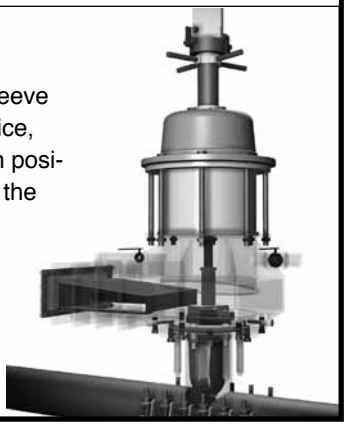

QuikValve™

Sleeve Dimensions

SLEEVE DIMENSIONS					
FLANGE SIZE	DIMENSIONS / QUANTITY				
	A	B	C	*D	E
4"	18.0	6.75	12.65	12.35	12
6"	18.0	8.50	14.40	14.00	12
8"	24.0	10.50	16.40	16.50	16

*OD to accept QuikValve Installation Equuipment

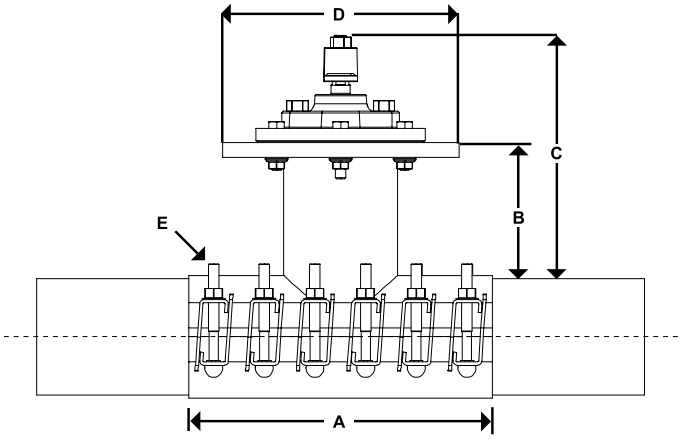

Transmate
1-800-426-9341
www.romac.com

MADE IN U.S.A

QuikValve™ Insertion Machine

QuikValve™

"When you are under pressure to install a valve in an operating line"

Item Number / Description		List Price
364-00*	**QuikValve Package (Base Machine, Storage Box and All Accessories**	**$48,504.32**
	The following are included: - Base Machine (360-00) - Slide Gate - 6" and 8" Reamers, Blades and Sizing Rings - Shell Cutters: 5.5", 6", 6.325", 7.5", 8" and 8.425" - Shaft Nose and PVC Pilot - Spacer Assembly - Hydraulic Power System 15 HP - Assorted fasteners, cap screws and nuts - 6" and 8" Blind Flanges - Job-site training	
364-02	**4" QuikValve™ Add-On** The 4" Add-On Package includes: - 4" Reamer, Blades and Sizing Ring - Shell Cutters 3.5", 4", 4.275" - Assorted Fasteners - 4" Blind Flange	**7,078.45**
360-00	**QuikValve™ Base Machine** For lateral tapping, QuikValve™ & InsertaValve™ installations The Q.V. Base Machine includes: - Q.V. Shaft Nose included (360-22) - 1" Spade Bit (350-03-08) - Q.V. PVC Pilot (360-24) - Storage Box (350-61) - Tapping Compound (353-10-1)	**13,466.35**

For more information on the QuikValve™ Machine, please contact Romac Customer Service 1-800-426-9341

*Requires purchase of a sleeve and valve. Not included in 364-00

	Item Number	Description	List Price
		SLEEVES with alloy bolts & nuts	
4"	310-0450010	QVS-4.50 (4.48 - 4.55)*	$1,312.97
	310-0490010	QVS-4.90 (4.70 - 4.90)	1,312.97
	310-0510010	QVS-5.10 (4.91 - 5.10)	1,312.97
	310-0530010	QVS-5.30 (5.11 - 5.30)	1,312.97
	310-0550010	QVS-5.50 (5.31 - 5.50)	1,312.97
6"	310-0663010	QVS-6.63 (6.61 -6.68)*	1,534.79
	310-0700010	QVS-7.00 (6.81 -7.00)	1,534.79
	310-0720010	QVS-7.20 (7.01 -7.20)	1,534.79
	310-0740010	QVS-7.40 (7.21 -7.40)	1,534.79
	310-0760010	QVS-7.60 (7.41 -7.60)	1,534.79
8"	310-0863010	QVS-8.63 (8.61 -8.68)*	1,878.93
	310-0915010	QVS-9.15 (8.95 -9.15)	1,878.93
	310-0935010	QVS-9.35 (9.16 -9.35)	1,878.93
	310-0955010	QVS-9.55 (9.36 -9.55)	1,878.93
	310-0975010	QVS-9.75 (9.56 -9.75)	1,878.93
		SLEEVES with 304 S.S. bolts & nuts	
4"	310-0450011	QVS-4.50 (4.48 - 4.55)*	$1,372.69
	310-0490011	QVS-4.90 (4.70 - 4.90)	1,372.69
	310-0510011	QVS-5.10 (4.91 - 5.10)	1,372.69
	310-0530011	QVS-5.30 (5.11 - 5.30)	1,372.69
	310-0550011	QVS-5.50 (5.31 - 5.50)	1,372.69
6"	310-0663011	QVS-6.63 (6.61 -6.68)*	1,643.52
	310-0700011	QVS-7.00 (6.81 -7.00)	1,643.52
	310-0720011	QVS-7.20 (7.01 -7.20)	1,643.52
	310-0740011	QVS-7.40 (7.21 -7.40)	1,643.52
	310-0760011	QVS-7.60 (7.41 -7.60)	1,643.52
8"	310-0863011	QVS-8.63 (8.61 -8.68)*	2,023.99
	310-0915011	QVS-9.15 (8.95 -9.15)	2,023.99
	310-0935011	QVS-9.35 (9.16 -9.35)	2,023.99
	310-0955011	QVS-9.55 (9.36 -9.55)	2,023.99
	310-0975011	QVS-9.75 (9.56 -9.75)	2,023.99

*For IPS size steel pipe and PVC (Class 160) or greater

		INSERTION VALVES	
4"	361-04	4", Left Open, Mang. Stem	$1,185.59
	361-04R	4", Right Open, Mang. Stem	1,185.59
	361-04-N	4", Left Open, NDZ Stem	1,265.11
	361-04R-N	4", Right Open, NDZ Stem	1,265.11
	361-04SS	4", Left Open, Mang. Stem w/S.S. B&N	1,301.26
	361-04RSS	4", Right Open, Mang. Stem w/S.S. B&N	1,301.26
	361-04SS-N	4", Left Open, NDZ w/S.S. B&N	1,337.40
	361-04RSS-N	4", Right Open, NDZ Stem w/S.S. B&N	1,337.40
6"	361-06	6", Left Open, Mang. Stem	1,313.04
	361-06R	6", Right Open, Mang. Stem	1,313.04
	361-06-N	6", Left Open, NDZ Stem	1,387.94
	361-06R-N	6", Right Open, NDZ Stem	1,387.94
	361-06SS	6", Left Open, Mang. Stem w/S.S. B&N	1,528.39
	361-06RSS	6", Right Open, Mang. Stem w/S.S. B&N	1,528.39
	361-06SS-N	6", Left Open, NDZ Stem w/S.S. B&N	1,771.77
	361-06RSS-N	6", Right Open, NDZ Stem w/S.S. B&N	1,771.77
8"	361-08	8", Left Open, Mang. Stem	1,569.99
	361-08R	8", Right Open, Mang. Stem	1,569.99
	361-08-N	8", Left Open, NDZ Stem	1,697.73
	361-08R-N	8", Right Open, NDZ Stem	1,697.73
	361-08SS	8", Left Open, Mang. Stem w/S.S. B&N	1,785.45
	361-08RSS	8", Right Open, Mang. Stem w/S.S. B&N	1,785.45
	361-08SS-N	8", Left Open, NDZ Stem w/S.S. B&N	2,081.48
	361-08RSS-N	8", Right Open, NDZ Stem w/S.S. B&N	2,081.48

Transmate
1-800-426-9341
www.romac.com

MADE IN U.S.A

QuikValve™ Insertion Machine

BASE MACHINE

Item Number	Decsription	List Price
360-00	QuikValve, Base Machine	$13,466.35
360-22	QuikValve, Shaft Nose	449.88
360-24	QuikValve, PVC Pilot	344.78
350-03-08	Spade Bit	96.12
360-01	QuikValve, Main Shaft	696.69
360-06-01	QuikValve, Posi-Brake Clip, High	50.86
360-06-03	QuikValve, Posi-Brake Clip, Low	50.86
360-31	QuikValve, Lead Tube Split Collar	314.94
351-51-2	Set Screw for Shaft Nose and PVC Pilot	1.23

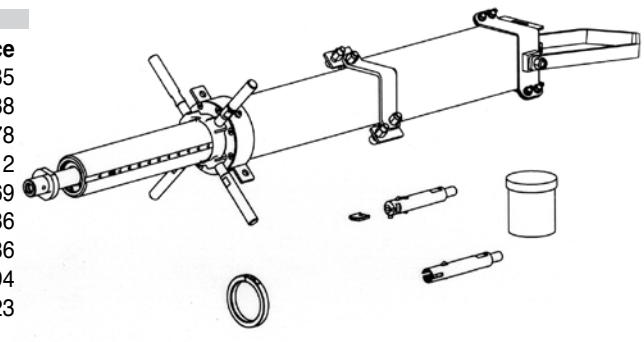

HYDRAULIC DRIVE

Item Number	Decsription	List Price
360-72	QuikValve 15 HP Hydraulic Unit w/Motor & Hoses	$11,277.55
372-82000-01	82000 HPU Hydraulic Base Power Unit	see pg. TM-27
360-72-02	Motor & Hose	see pg. TM-27

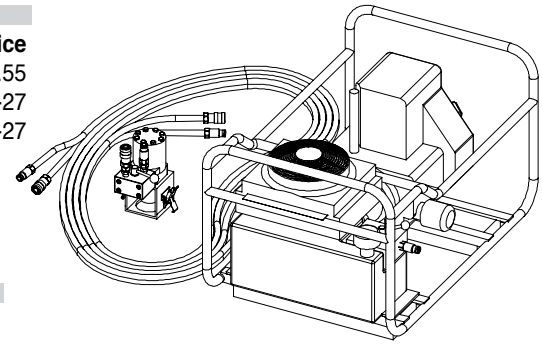

REAMERS

Item Number	Decsription	List Price
362-04	QuikValve, 4" Reamer	$4,854.58
362-04-08	QuikValve, 4" Reamer Roller	194.78
362-04-09	QuikValve, 4" Reamer Sizing Ring	589.67
362-04-11	QuikValve, 4" Reamer Blade	134.66
362-06	QuikValve, 6" Reamer	5,056.67
362-06-08	QuikValve, 6" Reamer Roller	199.14
362-06-09	QuikValve, 6" Reamer Sizing Ring	679.37
362-06-11	QuikValve, 6" Reamer Blade	148.66
362-08	QuikValve, 8" Reamer	6,687.68
362-08-08	QuikValve, 8" Reamer Roller	200.59
362-08-09	QuikValve, 8" Reamer Sizing Ring	769.07
362-08-11	QuikValve, 8" Reamer Blade	191.15

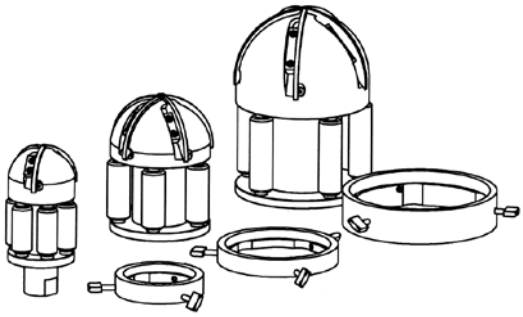

CUTTERS

Item Number	Decsription	List Price
350-01-1032	Cutter, 3.5" O.D.	$663.44
360-29-40	Cutter, 4" O.D.	759.07
360-29-42	Cutter, 4.25" O.D.	804.61
350-01-1048	Cutter, 5.5" O.D.	983.36
360-29-60	Cutter, 6" O.D.	1,138.61
360-29-63	Cutter, 6.325" O.D.	1,184.14
'350-01-1064	Cutter, 7.5" O.D.	1,300.66
360-29-80	Cutter, 8" O.D.	1,487.76
360-29-84	Cutter, 8.425" O.D.	1,533.31

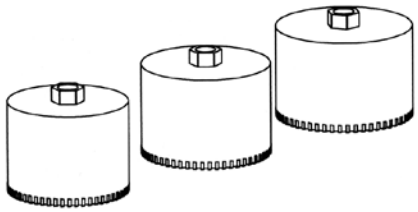

BLIND FLANGES

Item Number	Decsription	List Price
360-30-04	QuikValve, 4" Blind Flange	$382.32
360-30-06	QuikValve, 6" Blind Flange	382.32
360-30-08	QuikValve, 8" Blind Flange	424.80

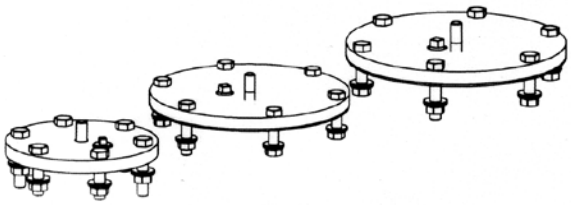

Transmate
1-800-426-9341
www.romac.com

MADE IN U.S.A

QuikValve Insertion Machine

Some Advantages of the QuikValve...

- The valve is inserted in the open position, so no matter how the water flow is configured, there is no loss of water pressure.
- The process is quick, usually much faster than alternative methods of line stopping or cut-ins. The average installation time is between two and three hours.
- There is only one cut in the main, and the main is never severed. The pipe retains its structural integrity just as it would with a size on size lateral tap.
- The insert uses a standard valve stem and nut. Any QuikValve installation will have the same number of turns to open and close as any valve in the system.
- Should the need arise, the QuikValve insert is replaceable under pressure.
- The insert uses the newest valve technology, the rubber coated wedge. This gives the QuikValve good sealing characteristics with an installation pressure rating of up to 150 psi.
- Due to the small envelope of the installed QuikValve, it has been installed in places where other pipelines and conduits precluded a valve cut-in.
- The QuikValve insertion machine doubles as a 3" through 12" lateral tapping machine. With 27" of travel, the equipment easily handles a size on size 12" tap. Incidentally, the manual feed on the machine has proved to give the operator a real feel for the cut, allowing him to stop if trouble arises before damage to the main occurs.
- The QuikValve gives a new method to easily isolate hydrants, water towers or spurs.

Frequently Asked Questions...

Q Does the valve have the same number of turns as a standard valve?

A Yes, and the same height.

Q What are the differences between the QuikValve sleeve and a standard fabricated tapping sleeve?

A There are three main differences:

1. The QuikValve sleeve has a machined neck due to the tolerances required to allow the insert to seal.
2. The QuikValve sleeve uses an all-around full seal gasket and armors instead of just a neck ring.
3. The QuikValve sleeve has a narrow range, just ± 0.10, again to optimize sealing characteristics.

Q Why do you use an all around gasket instead of a neck ring on the QuikValve sleeve?

A We felt that sealing all the way around the pipe added significantly to the stability of the product. This is the design we have always used in our clamp products. The all around seal gives an increased safety margin against any leaking around the edges of the QuikValve sleeve, supports the pipe, and applies a more even pressure gradient to the outside diameter of the pipe wall.

Q What is the valve insert made of?

A The insert is a ductile iron cast plug that is encased with 55 durometer SBR rubber. The rubber is bonded to the casting during the rubber molding process.

Q Does this valve meet the AWWA valve specification?

A No, there is no AWWA specification that covers the QuikValve. If it ever does have an AWWA specification, it will be under a new category, separate from the standard cast valve specifications. The QuikValve's operating mechanism, the stem and nut, are standard and meet AWWA requirements.

Q Will the QuikValve always give a 100% seal?

A We don't guarantee a 100% seal. Our installations thus far have given a 100% seal. We do guarantee a seal that will allow work to be completed on your line.

Q What is the warranty period on the QuikValve?

A One year.

Q What does "NDZ Stem" mean?

A NDZ – Stands for "Non-Dezincification". One of the elements in most brass stems is zinc, and "Dezincification" is the leaching out of this zinc by corrosion. The following factors can lead to dezincification; warm water temperatures, high levels of acidity, chlorides and sulfides, in conjunction with high electrical conductivity. NDZ Bronze Stems address this phenomenon and still maintain AWWA standards.