ROMAC INDUSTRIES, INC.

# QuikValve™

## QuikValve Insertion Instruction Manual

(03/16/2017)

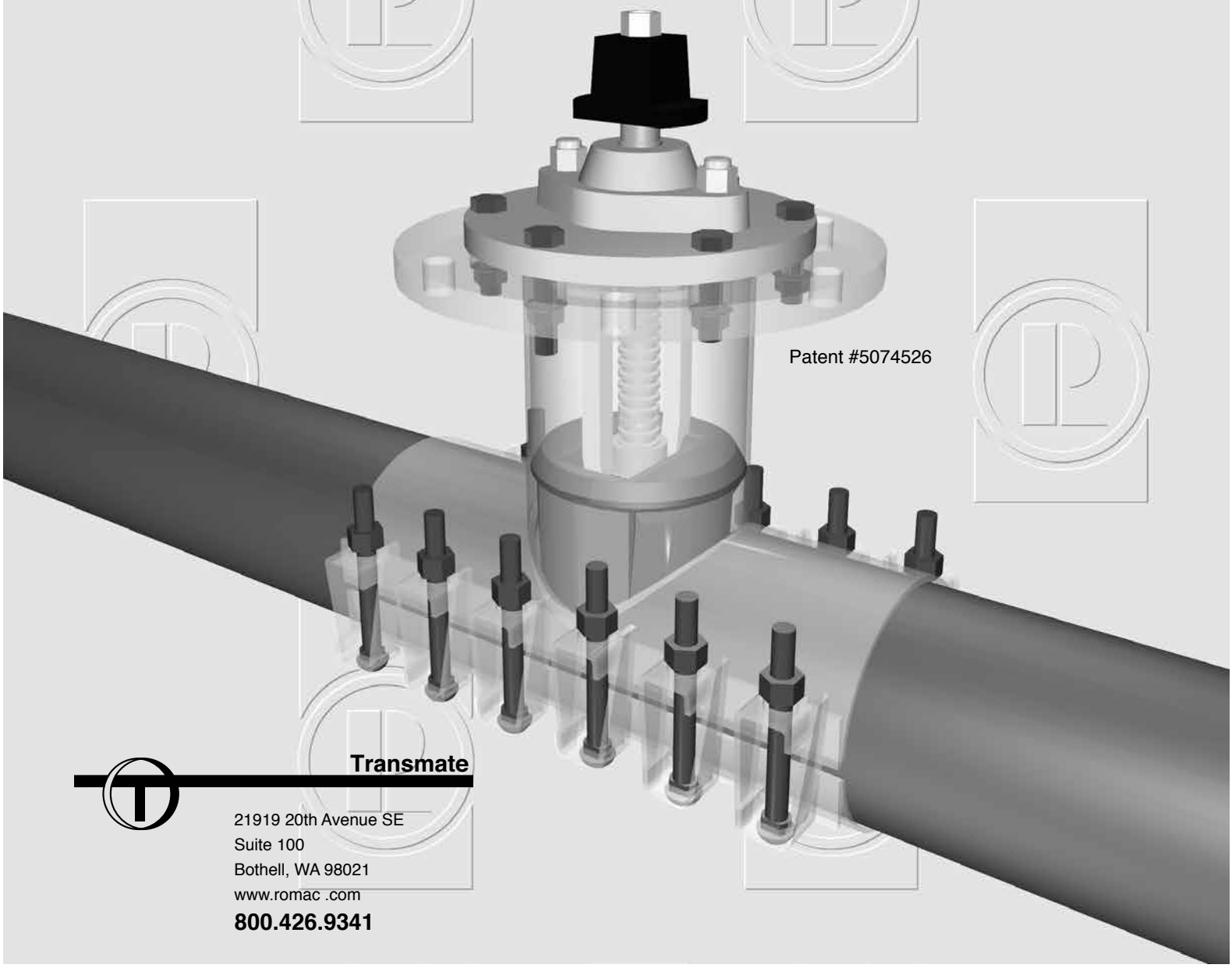

Patent #5074526


Transmate

21919 20th Avenue SE
Suite 100
Bothell, WA 98021
www.romac .com
**800.426.9341**

# 01 - Sleeve Installation:

**Tools Necessary:**

1. Wide blade chisel
2. Wire brush
3. 12" file
4. OD tape
5. Soap or rubber joint grease
6. Torpedo or standard level
7. 1-1/16" by 6" hex socket with ½"drive
8. Torque wrench 75 ft.-lbs. min. with ½"drive
9. 12" crescent or pipe wrench
10. Blind flange w/washers and nuts
11. Pressure test tee

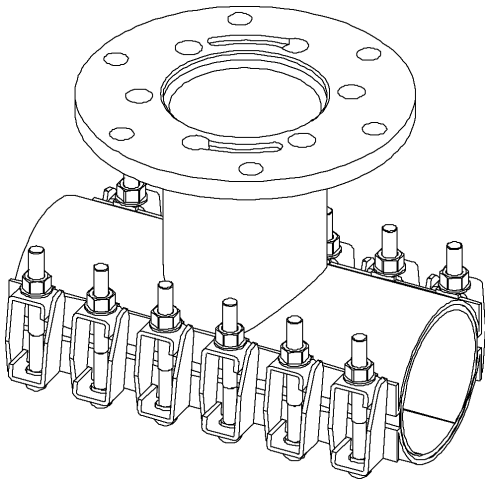

**Fig. A**

**Required Fasteners:**

1. 5/8" - 11 by 6" track head bolts with stainless steel washers and heavy hex nuts
2. Sleeve plug valve (Qty. 1)
3. Sleeve flange plug (Qty. 5)

1. Excavate the ditch to the optimum size. (Recommended excavation size is 6 x 6 ft. and 6 inches below the bottom of the pipe).

2. Clean the pipe all the way around for the length of the Sleeve plus 2" with a chisel, file, and or wire brushes. Clean the pipe to a smooth surface.

3. Measure the outside diameter (O.D.) of the pipe with an O.D. tape. If pipe's O.D. is outside the range of the Sleeve **STOP!** Obtain the correct sleeve size and then proceed.

4. Using the Drill Bushing marked for the nominal size of the sleeve you are using, check that the Drill Bushing fits into the inside diameter (I.D.) of the Sleeve Flange. Also check that it sits flush on the Sleeve Flange.

5. Soap or grease the tapered tails of the top half sleeve mat gasket.

6. Install the top-half of the Sleeve with the neck in the vertical direction (flange face horizontal).

7. Slide the bottom-half of the Sleeve under the pipe. Fit into place making sure that the tapered ends of the top-half mat gasket are not folded over in any place.

8. At one end of the sleeve, slip a 5/8" x 6" long "Track-head" bolt up through the lugs of both sleeve halves. Loosely secure with a metal washer and a 5/8" heavy hex nut. Do the same with one bolt at the other end of the sleeve, on the opposite side of the sleeve from the first bolt. Check for proper alignment of the lugs and that the gasket tails are lying flat with no folds or rolled edges.

9. Once both ends are supported, install the remaining bolts, washers and nuts in a similar manner.

10. Level the Sleeve Flange to the pipe using a torpedo or standard level. Set the level on the flange so that it lies across the pipe's direction.

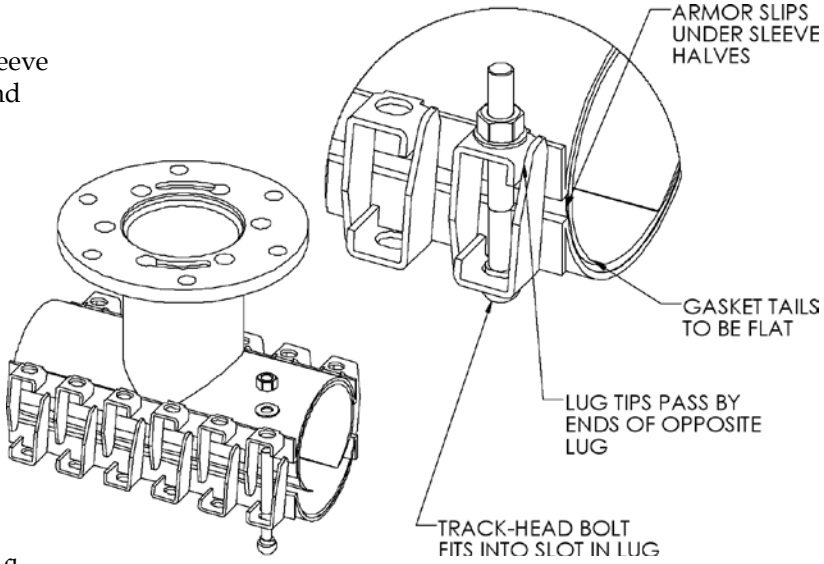


**Fig. B**

11. Snug up all the bolts and nuts, checking for folds in the gasket, that the armor on both sides between the top-half and back-half is slipped under both sleeve halves, and that the Sleeve Flange is still level.

12. Torque all the nuts and bolts evenly to 30 ft.-lbs., starting from the center set of bolts and working out to the end alternating back-and-forth and side-to-side.

    **Note:** The gap between the top and bottom sleeve halves should be about the same from the front to the back and from the right side to the left side.

13. Continue applying torque to all the nuts and bolts in 15 ft.-lbs. increments to a minimum of 60-70 ft.-lbs. of torque using the method described in step #12. (60 ft.-lbs. max on A/C pipe).

14. Let the sleeve set for 5 minutes while re-checking the gasket for folds, that the armor on both sides is slipped under both sleeve halves, that the halves are equally spaced apart, and the flange is still level.

15. Check the torque on the nuts and bolts and re-torque if needed.

16. Test the sleeve seal using a blind flange to 1-1/4 times the working pressure of the pipe (188 psi max). If the sleeve leaks, check the torque on the nuts and bolts.

17. When there is a good seal, de-pressurize and remove the blind flange.

18. Thread the sleeve plug valve into the bottom of the sleeve flange (as illustrated).

    Check to ensure that the ball valve is closed.Thread the other 5 Sleeve Flange Plugs into the remaining bolt circle holes and tighten all using a crescent or pipe wrench.

19. Check the face, the I.D. and the O.D. of the Sleeve Flange for any high spots in the epoxy. File down any high spots if located.
20. Bed the pipe and Sleeve before attaching the Slide Gate.

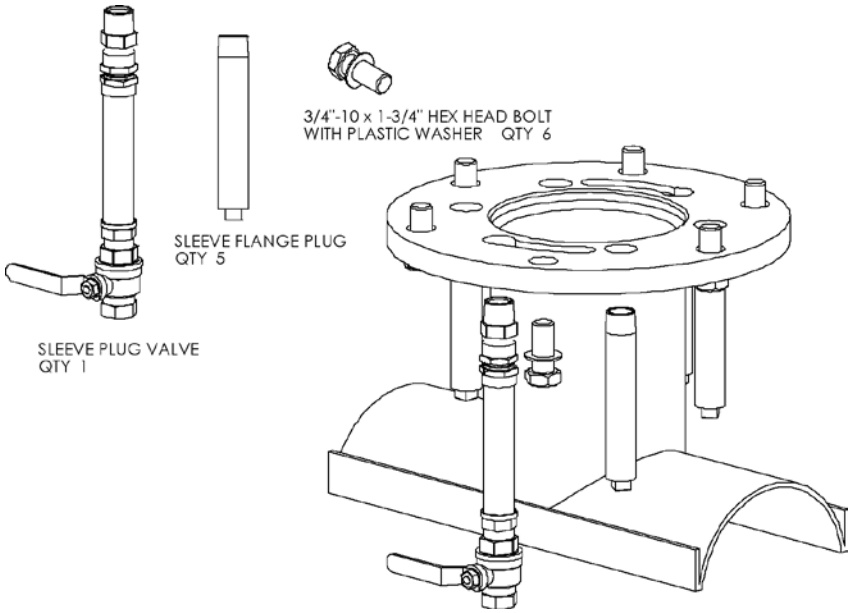


**Fig. C**

# 02 - Installing the Slide Gate:

**Tools Necessary:**

1. 12" Crescent wrench
2. (2) 1/2" drive socket wrenches
3. (2) 1-1/8" hex socket with 1/2" drive
4. 5/8"hex wrench with 1/2" drive
5. 15/16" hex socket with 1/2" drive
6. Slide gate speed wrench

**Required Fasteners:**

1. (6) 3/4" - 10 by 1 3/4" large hex head zinc plated g. 5 bolts with plastic washers - (12) for 4" installation
2. (6) 3/4" - 10 by 1 3/4" lg. special socket head cap screws (Necessary for 6" Adapter Flange only)

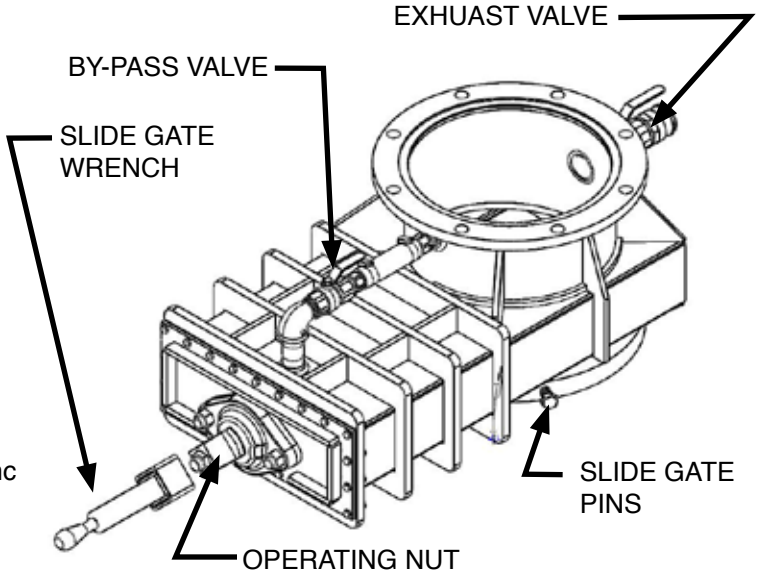


**Fig. D**

1. Inspect all sealing surface gaskets on Adapter Flanges and Slide Gate for dirt/ contaminants, tears or adhesive failure. Replace or repair at this time.

2. Adapter Flange to Sleeve:

   a. For 4 and 6" valve installations fit the counter-bore of the appropriate size Adapter Flange over top of the Sleeve Flange. Ensure that there is no dirt or contaminants between the Adapter Gasket and the Sleeve Flange. Secure using 3/4"-10 by 1- 3/4" lg. hex head bolts, up through the Sleeve Flange and into the Adapter Flange.

   b. For 8" valve installations, no Adapter Flange is required.

**NOTE:** Use washers as needed to ensure that the ends of the hex bolts are below the top surface of the flange. If they extend above the flange face, they may interfere with the proper alignment of the Drill Bushing.

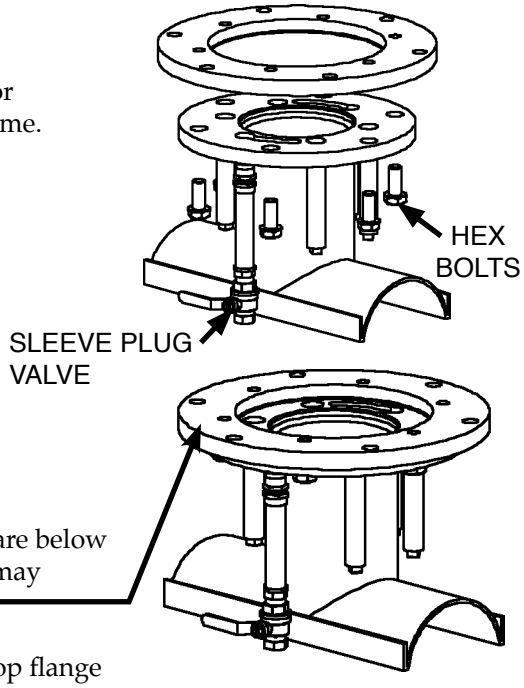


**Fig. E**

3. Insert the Slide Gate Lifting Hook into the two holes in the Slide Gate top flange located above the By-Pass Valve in the center of the Slide Gate.

4. Lift the Slide Gate above the Sleeve and slowly lower it into place. Make sure that no foreign material has fallen onto the mating face of the flange.

5. Fit the counter-bore of the Slide Gate bottom flange over the O.D. of Sleeve flange (or Adapter Flange if used).

6. Align the threaded holes of the Slide Gate bottom flange with the outer holes of the Sleeve Flange (or Adapter

Flange if used).

7. Adapter Flange to Slide Gate:

   a. 4" valve installation, insert the 3/4"-10 by 1-3/4" lg. hex head bolts through the Adapter Flange and thread into the Slide Gate bottom flange.

   b. 6" valve installation, insert the special 3/4"-10 by 1-3/4" lg. socket head cap screws through the Adapter Flange and thread into the Slide Gate bottom flange (see illustration).

   c. 8" valve installation, insert the 3/4"-10 by 1-3/4" lg. hex head bolts through the sleeve flange and thread into the Slide Gate bottom flange.

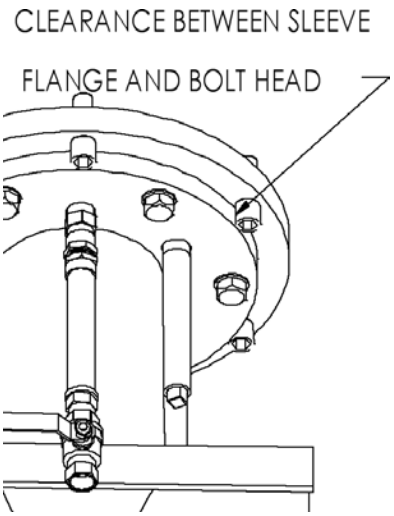


**Fig. F**

8. Tighten all the bolts until tight.

9. Thread each of the 3 Slide Gate pins (located on the O.D. of the Slide Gate bottom flange) in and out until the groove with the red mark in the bolt threads appears and is flush with the outside of the flange. During the insertion process do not thread the pins out any further than this noted distance!

10. Attach the Exhaust Hose to the Exhaust Valve and stretch the hose out of the ditch. Open the Exhaust Valve.

11. Operate the Slide Gate closed and open by turning the operating nut with the Slide Gate wrench. Check for smooth operation and to ensure that the gate opens completely out of the way. Fully closed or open takes approximately 42-44 turns in each direction – leave the slide gate in the full open position.

# 03 - Preparing the QuikValve machine for drilling:

**Tools Necessary:**

1. 3/16" hex wrench
2. 12" pipe wrench
3. 3/4" open end wrench
4. 3/8" drive ratchet
5. 5/8" hex socket with 3/8" drive
6. 12" crescent wrench
7. (2) 1/2" drive ratchets
8. (2) 1 1/8" hex sockets with 1/2" drive
9. 1 1/4" hex socket with 1/2" drive
10. Triflow lubricant

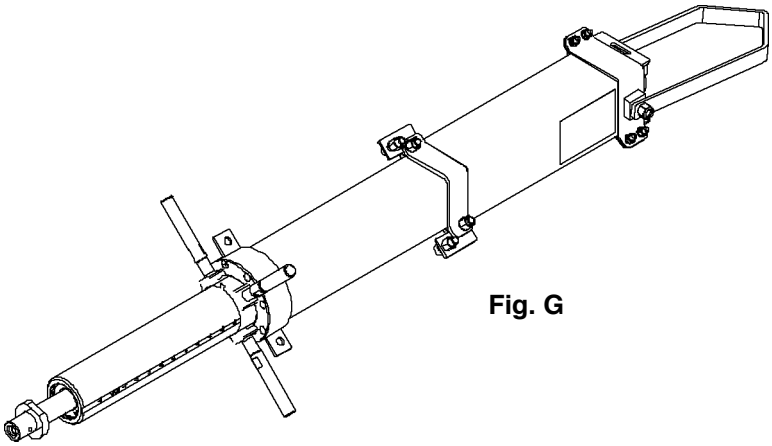

Fig. G

**Required Fasteners:**

1. (8) 3/4" - 10 by 2 1/2" large hex head bolts with two washers and a nut
2. (8) 3/4" - 10 by 12" gr. 8 hex head bolts with two washers and a nut

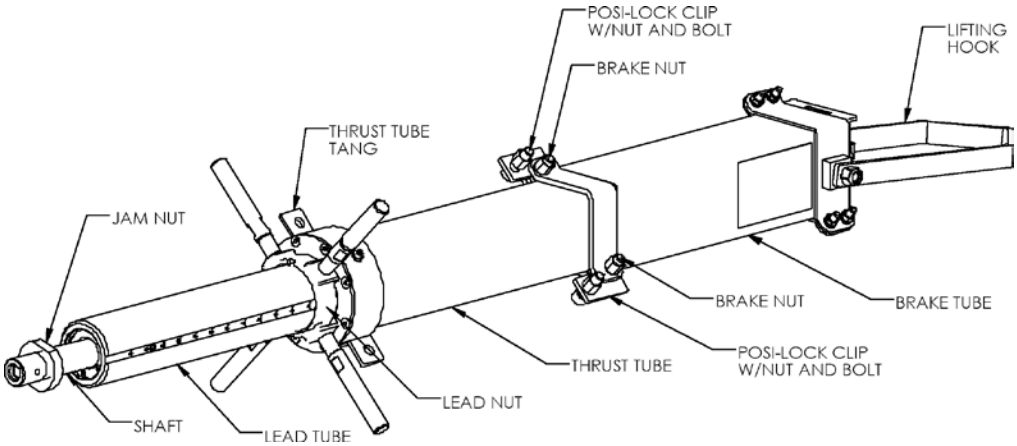


1. Extend the Shaft out of the Lead Tube by loosening the Brake Nuts and sliding the Brake Tube and Thrust Tube together. This makes setup easier.

2. Remove the Jam Nut from the end of the Shaft.

3. Slide the Adapter Bell over the Shaft and thread the Adapter Bell onto the Lead Tube until the gasket seats. Turn the Adapter Bell approximately 1/3 turn more until one of the set screw holes in the Adapter Bell's hub adapter lines up with the scale on the Lead Tube. Put the set-screw into that hole and tighten it down onto the scale - not the threads. Check the Adapter Gasket for proper positioning. If the gasket has been forced into the Adapter's bore, remove the Adapter and reinstall it.

4. Slide the Drill Bushing onto the Shaft and into the Adapter Bell, with the tapered edge of the Drill Bushing facing in towards the Adapter Bell.

5. Thread the Jam Nut onto the Shaft until it reaches the end of the threads, and then rotate the Jam Nut one full turn back. Clamp it into place using the 3/16" hex wrench.

6. Inspect the Shaft Nose Spade Bit for wear. Ensure it is attached securely. Replace or tighten if needed. Inspect the Shaft Nose retaining mechanism for proper operation; the retaining mechanism should push in and return to position easily. Operate each a couple of times to verify.

7. Install Shaft Nose or PVC Pilot by threading into the end of the Main Shaft. To secure the Shaft Nose or PVC Pilot into place, thread Set Screw in from side and into the groove in the Shaft Nose or PVC Pilot.

   It is essential to secure the Shaft Nose and PVC Pilot to the end of the Main Shaft to ensure that the Shaft Nose and PVC Pilot stay in place.

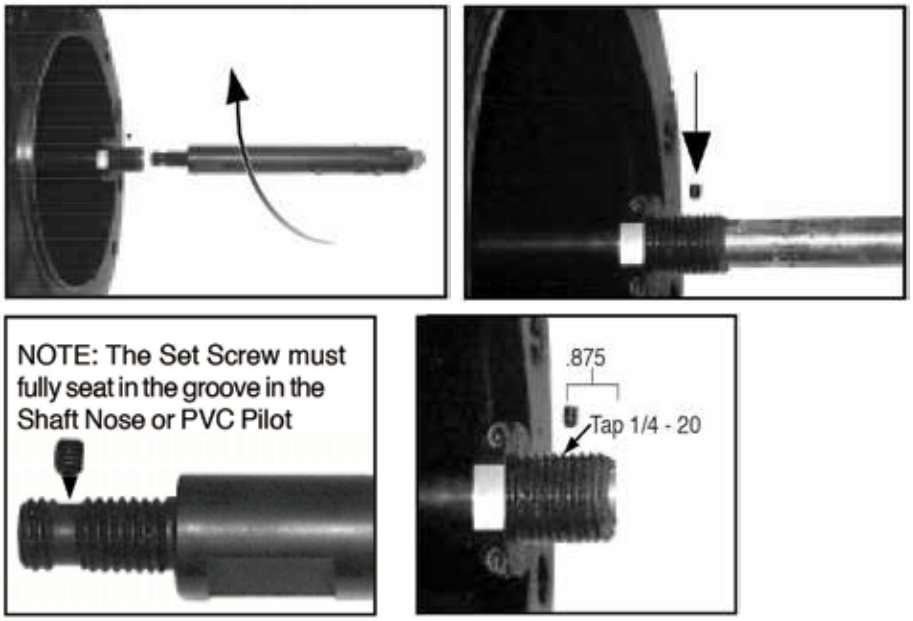


8. Install the appropriate hole-saw, as determined by the pipe type and pipe size listed on the Travel Chart, onto the end of the Shaft. Thread it back tight against the Jam Nut.

**Note:** If not sure of the pipes I.D. size or suspect there may be heavy build up on the pipes I.D. walls, start with a smaller hole-saw than called for on the Travel Chart for that pipe size range.

9. Adjust the Split Collar so that the side closest to the Lead Nut is at the location on the Lead Tube that is indicated by the Travel Chart for the type of pipe being cut (“Cutter Travel” column).

10. Slide the Shaft back in by extending the Brake Tube to its full extent. Tighten the Brake Nuts using the 5/ 8" hex socket and 3/8" ratchet. Make sure that the Lead Nut is at “0” on the Lead Tube.

11. Lift the Machine using the Lifting Hook at the end of the Brake Tube above the top of the Slide Gate top flange. Make sure not to allow the full weight of the machine to rest on the hole-saw while lifting the machine up.

**Note**: This is your last chance to make sure that the Slide Gate is in the open position.

12. Lower the Machine onto the top flange of the Slide Gate, aligning bolt holes in the Adapter Bell and flange. The Adapter Bell will fit into the counter-bore of the flange; make sure of proper fit.

13. Use the 3/4"-10 by 2 1/2" lg. bolts (Qty. 8) to secure the Adapter Bell to the Slide Gate. Use the 1 1/8" hex sockets with 1/2" drives to tighten all eight bolts. Tighten the bolts twice.

# 04 - Drilling Operation:

1. Lower the Brake Tube (using the 5/8"socket and 3/8" ratchet) by slowly loosening the Brake Nuts. Control the Brake Tube's descent until the holes in the Posi-lock Brake Clips are aligned with those in the tangs of the Thrust Tube. Insert and tighten the Posi-lock Bolts through the clips and tangs, then tighten the Brake Nuts.

2. Thread the Lead Nut down the Lead Tube until the cutter on the Shaft Nose contacts the pipe; resistance will be felt at the Lead Nut (the Shaft is not rotating at this time). Then thread the Lead Nut back up the Lead Tube for two full rotations away from the pipe.

3. Lock the Drill Bushing in place by slowly tightening the Slide Gate Pins. Use the 15/16" socket and ½" ratchet. Alternate tightening so that equal pressure is applied; less than 10 ft. lbs. torque is required.

4. Attach the hydraulic motor to the ¾" square drive of the QuikValve Machine. Start the Hydraulic Motor so the Shaft is rotating; the Valve Handle will be perpendicular to the Valve Block. Start threading the Lead Nut down the Lead Tube. Within two complete rotations of the Lead Nut the Spade Bit will be entering into the cut. Use a high feed rate with the Spade Bit to ensure proper operation.

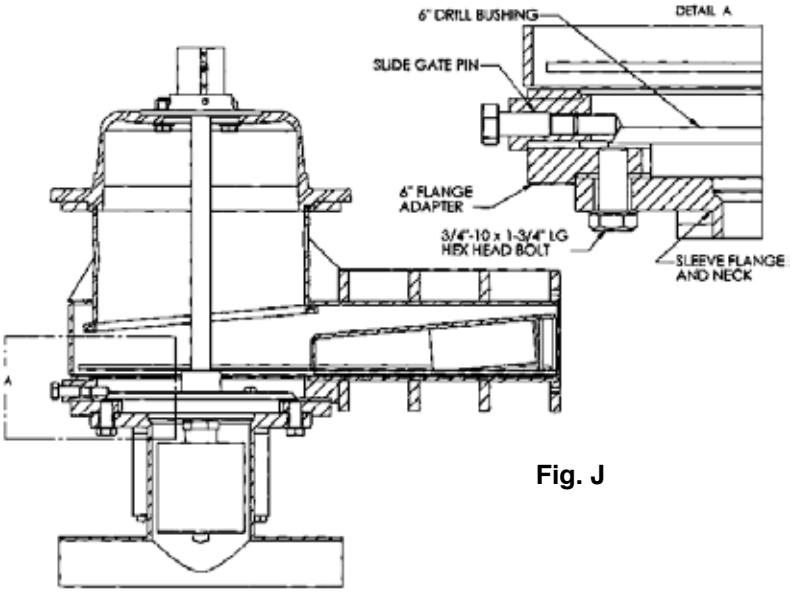


Fig. J

5. Once the Spade Bit cuts through the pipe wall, water will fill the interior of the Slide Gate, and water will start flowing out of the Exhaust Hose Exhaust Valve. Leave the Exhaust Valve open to flush chips during drilling.

6. Feed the hole-saw at a slow rate of feed until the appropriate travel distance has been reached per the Travel Chart (Lead Nut reaches the Split Collar). 7. The proper travel distance of the hole-saw is to the centerline of the pipe.

7. Turn the Drive Motor off and remove it.

8. Thread the Slide Gate Pins out of the Bottom Flange to the groove with the red mark noted earlier to unlock the Drill Bushing.

9. Feed the lead nut up until "0" on the Lead Tube is reached.

10. Take the Posi-lock bolts apart and slide them out of the clips and tangs.

11. Carefully loosen the Brake Nuts and slide the Brake Tube to its full-extended position. With pressure in the pipeline, the Brake Tube may extend on its own.

12. Once the Brake Tube has been extended back to the starting point, tighten the Brake Nuts.

13. With the Slide Gate speed wrench, rotate the Operating Nut until the Slide Gate is closed (approx. 42 - 44 complete turns).

14. Check to make sure that the Slide Gate By-Pass Valve is closed.

15. Open the Exhaust Valve and let the water run until it stops. If the water does not stop flowing, tighten the Slide Gate Stem Nut more. This is a control valve; while it usually will give a 100% seal, it may have some seepage.

16. Loosen the bolts attaching the Adapter Bell to the Slide Gate top flange, then remove them and lift the machine off.

17. Unlock the Brake Tube by loosening the Brake Nuts and slide the Brake Tube and Thrust Tubes together to extend the Shaft for easier take down and set-up.

18. Using the 3/16" hex-wrench loosen the screws in the Jam Nut.

19. Remove the drive motor from the top of the machine and with the 3/4" open-end wrench to hold the Shaft and use the 12" pipe wrench to thread the Jam Nut away from the hole-saw.

20. Thread the hole-saw off of the end of the Shaft to expose the flats on the Shaft Nose.

N**ote:** Remember to remove the Shaft Nose Set Screw.

With the 3/4" open end wrench still holding the Shaft, use the 12" crescent wrench to break loose the Shaft Nose from the end of the Shaft. Finish unscrewing the Shaft Nose off. Separate the Shaft Nose, cutter and coupon from each other.

21. Repeat steps 1 through 20 until the appropriate sized hole has been cut (4” = 4.275", 6” = 6.325", and 8” = 8.425" respectively). For repeat cuts, no Shaft Nose is required but the travel distances will remain the same.

22 Remove the Jam Nut and Drill Bushing from the end of the Shaft.

# 05 - Reaming Operation:

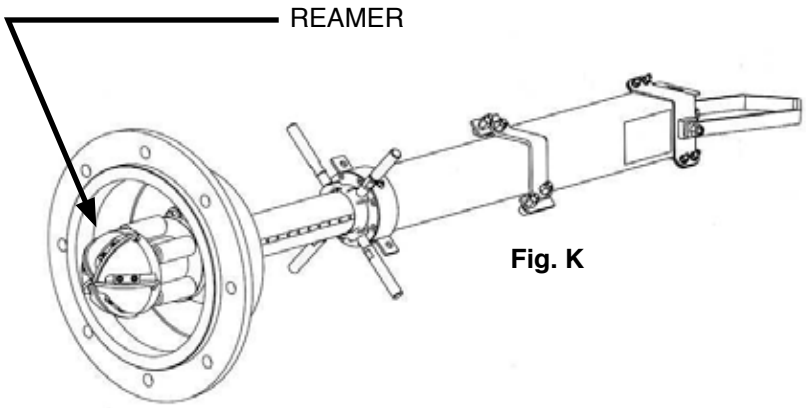


Fig. K

1. Thread the Jam Nut onto the Shaft until it reaches the end of the threads. Rotate the Jam Nut one full turn out and clamp into place using the 3/16" hex wrench.

2. Thread the Reamer onto the end of the Shaft until it comes into contact with the Jam Nut.

3. Slide the Shaft back in by extending the Brake and Thrust Tubes to their full extent. Tighten the Brake Nuts using the 5/ 8" hex socket and 3/8" socket wrench. Make sure that the Lead Nut is at “0” on the Lead Tube.

4. Re-set the Split Collar to the appropriate travel distance on the Lead Tube (per the Travel Chart - “Reamer Travel” column) and retighten.

5. Lift the machine being careful not to allow the full weight of the machine to rest on the Reamer. Position the machine onto the Slide Gate. Fit the Adapter Bell into the counter-bore of the Slide Gate’s Top Flange, aligning the bolt holes.

6. Close the Exhaust Valve.

7. Slowly open the Slide Gate By-Pass Valve to balance the pressure across the Slide Gate.

8. Open the Slide Gate all the way (about 42 - 44 complete turns) with the Slide Gate wrench.

9. Attach the Drive Motor to the top of the QuikValve Machine as explained above.

10. Release the tension on the Brake Tube (using the 5/8"socket and ratchet) by slowly loosening the Brake Nuts. Control the Brake Tube’s decent until the holes in the Posi-lock clips are aligned with those in the tangs of the Thrust Tube. Insert and tighten the Posi-lock bolts through the clips and tangs, then tighten the Brake Nuts (using the 5/8" socket and ratchet).

11. Start threading the Lead Nut down the Lead Tube until the Lead Nut approaches “8” on the Lead Tube scale.

12. Turn the Drive Motor to the on position;. the Valve Handle will be perpendicular to the Valve Block.

13. Slowly feed the Lead Nut down the Lead Tube until the Reamer starts cutting.

14. A slow feed rate is required when reaming. Feeding the Reamer is much different than the feeding of the hole-saw. The Reamer has much fewer teeth and can take much smaller cuts per pass than a hole-saw. Each cut of the Reamer also covers a much larger area than the teeth of a hole-saw.

15. The Reamer should be fed to its prescribed travel depth, to the Split Collar. If hard feeding is encountered during reaming, slow down the feed rate and progress on. Continue to feed until the distance set in step 4 is reached.

16. Turn off the Drive Motor and remove it. Feed the Lead Nut up until “0” on the Lead Tube is reached.

17. Take the Posi-lock bolts apart and slide them out of the clips and tangs.

18. Carefully loosen the Brake Nut and slide the Brake Tube to its full-extended position.

19. Once the Brake Tube has been fully extended, tighten the Brake Nuts.

20. With the Slide Gate Wrench, rotate the Wrench Nut until the Slide Gate is closed (approximately 42 - 44 complete turns).

21. Close the Slide Gate By-Pass Valve.

22. Open the Exhaust Valve and let the water run until it stops. If the water does not stop flowing, tighten the Slide Gate Operating Nut more.

23. Loosen the bolts attaching the Adapter Bell to the Slide Gate top flange, then remove them and lift the QuikValve Machine off.

24. Unlock the Brake by loosening the Brake Nuts and slide the Brake Tubes and Thrust Tubes together to extend the Shaft for easier take down and reset-up.

25. Using the 3/16" hex wrench loosen the screws in the Jam Nut.

26. Remove the drive motor from the top of the machine and with cool new tool to hold the Shaft and use the 12" pipe wrench to thread the Jam Nut away from the Reamer.

27. Thread the Reamer off of the end of the shaft.

# 06 - Valve Installation:

**Tools Necessary:**

1. 12" crescent wrench
2. 12" pipe wrench
3. (2) 1/2" drive socket wrenches
4. 15/16" socket
5. Valve adapter
6. Spacer
7. 1 1/8" hex socket

**Required Fasteners:**

1. (6) 5/8" - 11 flanged lock nuts
2. (6) 5/8" steel washers
3. (6) 5/8" acetal washers
4. (8) 3/4" - 10 by 12" large gr. 8 bolts, nuts and washers

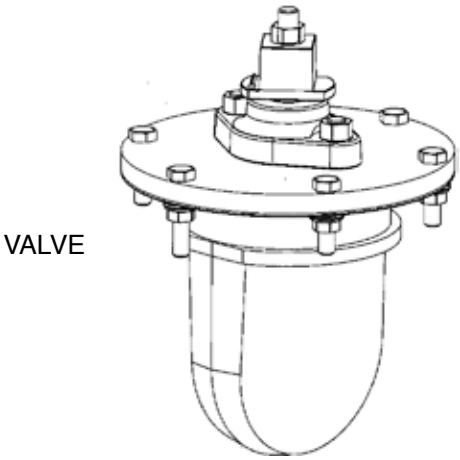


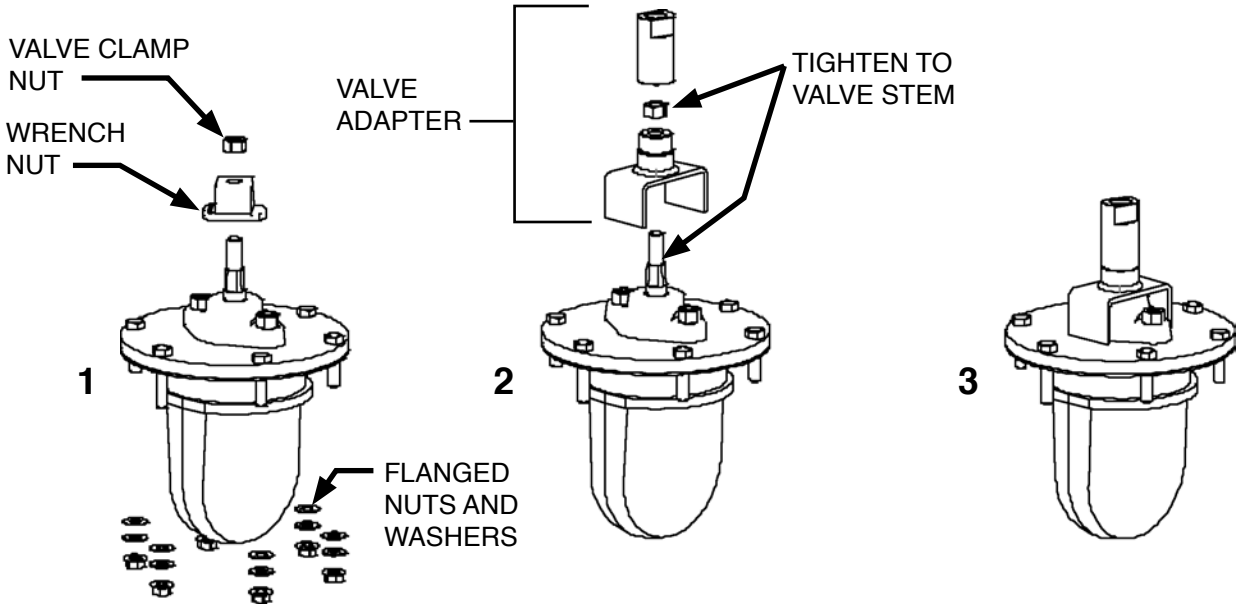


Fig. M

1. Remove the Valve flange nuts and washers (one steel and one acetal) from each of the Valve Flange Bolts (6 ea.).

2. Remove the Valve Clamp Nut off of the top of the valve stem with a 12" crescent wrench and then remove the Wrench Nut.

3. Thread apart the Valve Adapter.

4. The bottom half of the Valve Adapter has “C” shaped legs; the legs of this piece sets on the Valve Flange and straddles the bonnet cover with the valve stem stud extending through the center of it: see Fig. P 2. Turn this Valve Adapter half clockwise until it contacts the sides of the bonnet cover. See Fig. P 3.

5. Re-thread the Valve Clamp Nut onto the Valve Stem; tighten down securing the Valve Adapter half in place. See Fig. P 2.

6. Thread the two Valve Adapter halves back together. See Fig. P 3.

7. On the QuikValve Machine thread the Jam Nut down the Shaft until it bottoms out at the end of the threads. Rotate the Jam Nut one full turn out and clamp into place using the 3/16" hex wrench.

8. Thread the Valve Adapter with the attached Valve onto the end of the Shaft.

9. Lubricate the Valve on all sealing surfaces with the rubber lubricant.

10. Slide the Shaft back in by extending the Brake Tube and Thrust Tube to their full extent. Tighten the Brake Nuts using the 5/ 8" hex socket and 3/8" socket wrench. Make sure that the Lead Nut is at “0” on the Lead Tube.

11. Place the Spacer on the Slide Gate so that it fits into the counter-bore of the Top Flange. Rotate the Spacer so that the bolt holes in its flange line up with those in the Top Flange of the Slide Gate, Fig. N.

12. Lift the QuikValve Machine up, being careful of the Valve. Lower the QuikValve Machine towards the Spacer so you are able to line up the bolt holes in the Adapter Bell and in the Spacer flange and still see the valve plug. Keeping the bolt holes in alignment, rotate the valve so that the blue bolts are in alignment with the two holes in the Spacer (as illustrated - looking down the pipe, the blue bolts are at about the 2 and 8 o-clock positions), Fig. P 2.

13. Slowly lower the QuikValve Machine onto the top of the Spacer, ensuring that the Valve stays in that same orientation, and the Adapter Bell fits into the counter-bore of the Spacer and the bolt holes all line up.

14. Use the 3/4"-10 by 12" lg. bolts to fasten the Slide Gate, Spacer and Adapter Bell all together. Use the 1 1/8" hex socket and the 1 1/4" hex socket to tighten the bolts down. Go around twice making sure all the bolts are tight.

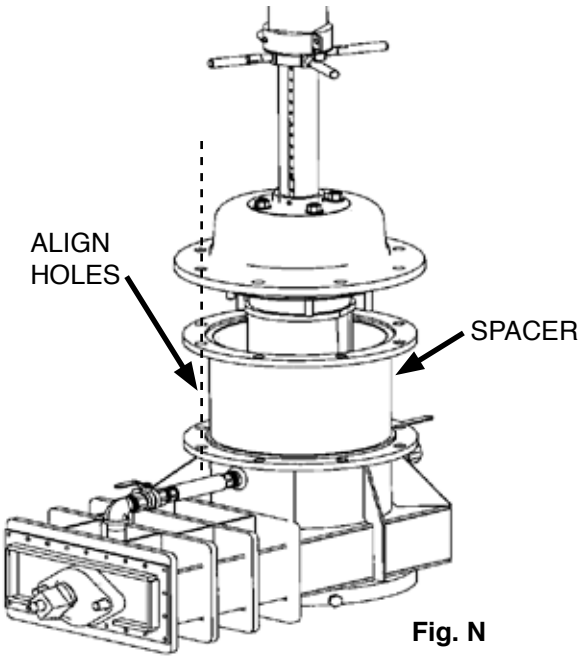

Fig. N

15. Close the Exhaust Valve.

**DO NOT OPEN THE EXHAUST VALVE AGAIN UNTIL THE VALVE IS IN PLACE, THE MACHINE HAS BEEN DISCONNECTED FROM THE VALVE ADAPTER AND ONCE THE BRAKE TUBE HAS BEEN EXTENDED BACK TO THE STARTING POINT WITH THE BRAKE NUTS TIGHTENED.**

16. Slowly open the Slide Gate By-Pass Valve to balance the pressure across the Slide Gate while holding the square end of the Shaft with a crescent wrench to make sure that the valve does not rotate out of position.

17. With the speed wrench open the Slide Gate all the way (about 42 - 44 complete turns).

18. Release the tension on the Brake Tube (using the 5/8"socket and ratchet) by slowly loosening the Brake Nuts. Control the Brake Tube's decent until the holes in the positive Brake Clips are aligned with those in the tangs of the Thrust Tube. Insert and tighten the Posi-lock bolts through the clips and tangs, then tighten the Brake Nuts (using the 5/8" socket and ratchet).

19. Start threading the Lead Nut down the Lead Tube until approaching the scale reading per the Travel Chart ("Valve Rotate" column). Slowly continue to feed the Lead Nut down until resistance is met. This should be the two longer blue bolts in the valve flange coming into contact with the bottom of the channels in the top of the sleeve flange, Fig. P 2.

20. Rotate the Lead Nut 1/2 turn in the opposite, updirection.

21. Using the 12" crescent wrench, rotate the Shaft in a clock-wise direction until it stops. This should occur within a 30-degree rotation, and will align the Valve Bolts to the Flange, Fig. P 3.

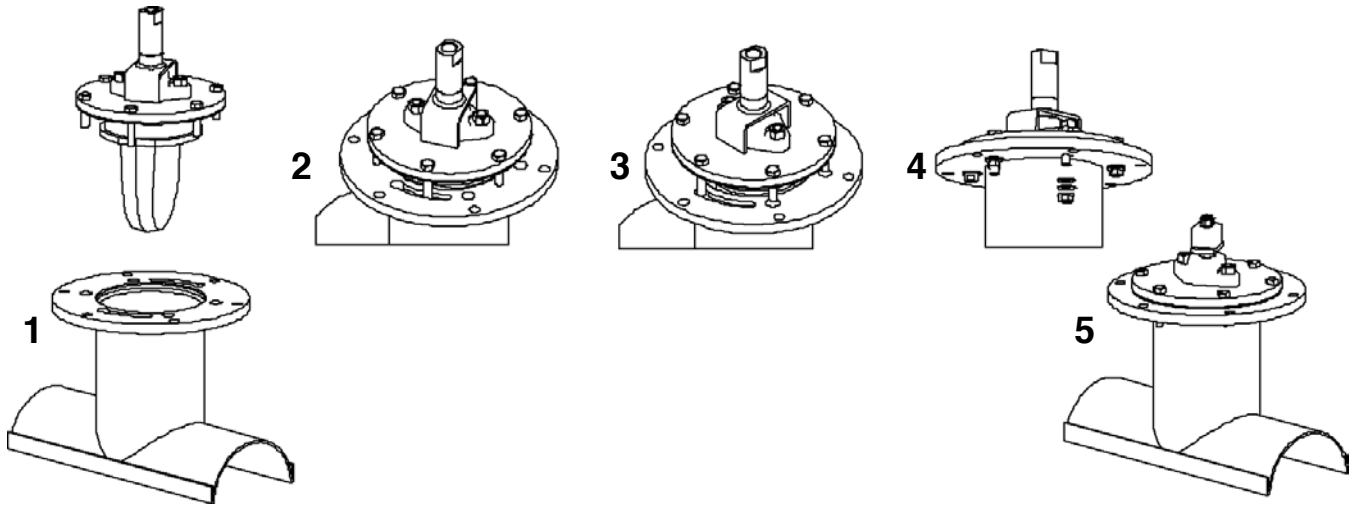


Fig. P

22. Resume the threading of the Lead Nut down the Lead Tube. There should be little resistance until you are close to the travel distance ("Valve Set" column) on the scale. Resistance should then start as the valve flange gasket is being compressed against the Sleeve Flange. Continue to tighten until it is very hard to turn the Lead Nut.

23. Open the valve on the Sleeve Plug Valve - NOT the Exhaust Valve. It should spray a little water then stop. If it continues to spray, tighten the Lead Nut down more. Now the QuikValve machine is holding the Valve in place.

24. Remove the Sleeve Plug Valve from the Sleeve flange and verify that the long blue bolt is extending out of the Flange. Place the plastic washer, then steel washer onto the bolt with the flanged locked nut and tighten down, Fig. P 4.

25. Remove the Sleeve Flange Plug on the opposite side to expose the other blue bolt. Place the plastic washer, then a steel washer onto the bolt with a flanged locked nut and tighten it down also.

26. Now remove the rest of the Sleeve Flange Plugs, replacing each of them with washers and a nut, one at a time. Tighten all of the nuts down.

27. Thread the Posi-lock bolts apart and slide them out of the clips and tangs.

28. Carefully loosen the Brake Nuts. (The QuikValve Machine is now being held in place through the Shaft attached to the Valve Adapter, to the valve and sleeve).

29. Using the 12" crescent wrench, rotate the Shaft in a counter clock-wise direction to disassemble the two halves of the Valve Adapter (about 15 rotations). As the Valve Adapter threads apart, the Brake Tube and Thrust Tube will start to separate.

30. Feed the Lead Nut back up the Lead Tube until the reading on the scale is "0"

31. Carefully slide the Brake Tube to its full-extended position.

32. Once the Brake Tube has been extended back to the starting point, tighten the Brake Nuts.

33. Open the Exhaust Valve to drain the water out of the Spacer.

34. Remove all of the 3/4"-10 by 12" lg. bolts

35. Lift the QuikValve Machine off of the top of the Spacer.

36. Remove the Spacer.

37. On 4 or 6" installations, you can remove one of the 3/4"-10 by 1 3/4" lg. hex bolts from the Sleeve Flange to the Flange Adapter to drain out the water from the Slide Gate.

38. On all installations, carefully loosen the hex bolts and then remove all of them except for the one located under the Exhaust Valve. This will hold the Slide Gate in place until there is a lifting force from the crane on the Slide Gate.

39. Remove the last bolt and lift the Slide Gate off of the top of the sleeve flange.

40. Remove the remaining parts of the Valve Adapter from the valve.

41. Replace the valve wrench nut onto the valve stem, thread the clamp nut onto the stem and tighten, Fig P 5.

42. Operate the valve for a shutdown of the flow.

# QuikValve™ Travel Chart

## 4" SIZE

| PIPE TYPE | O.D. NOM | SLEEVE SIZE | PIPE RADIUS | I.D. MIN. | CUTTER(S) | CUTTER I.D. | CUTTER TRAVEL | REAMER TRAVEL | VALVE ROTATE | VALVE SET |
|---|---|---|---|---|---|---|---|---|---|---|
| D.I. 50, PC 350 | 4.80 | 4.70-4.90 | 2.40 | 4.22 | 4.275 | 3.85 | 8" + 3/4 TURN | 7" + 3-3/4 TURNS | 4" | 6" |
| D.I. 51 | 4.80 | 4.70-4.90 | 2.40 | 4.22 | 4.275 | 3.85 | 8" + 3/4 TURN | 7" + 3-3/4 TURNS | 4" | 6" |
| D.I. 52 | 4.80 | 4.70-4.90 | 2.40 | 4.16 | 4.275 | 3.85 | 8" + 3/4 TURN | 7" + 3-3/4 TURNS | 4" | 6" |
| D.I. 53 | 4.80 | 4.70-4.90 | 2.40 | 4.10 | 4.275 | 3.85 | 8" + 3/4 TURN | 7" + 3-3/4 TURNS | 4" | 6" |
| D.I. 54 | 4.80 | 4.70-4.90 | 2.40 | 4.04 | 4.275 | 3.85 | 8" + 3/4 TURN | 7" + 3-3/4 TURNS | 4" | 6" |
| D.I. 55 | 4.80 | 4.70-4.90 | 2.40 | 3.98 | 4.00, 4.275 | 3.57, 3.85 | 8" + 3/4 TURN | 7" + 3-3/4 TURNS | 4" | 6" |
| D.I. 56 | 4.80 | 4.70-4.90 | 2.40 | 3.92 | 4.00, 4.275 | 3.57, 3.85 | 8" + 3/4 TURN | 7" + 3-3/4 TURNS | 4" | 6" |
| | | | | | | | | | | |
| C900 PC165 (DR25, PC100) | 4.80 | 4.70-4.90 | 2.40 | 4.36 | 4.275 | 3.85 | 8" + 3/4 TURN | 7" + 3-3/4 TURNS | 4" | 6" |
| C900 PC235 (DR18, PC150) | 4.80 | 4.70-4.90 | 2.40 | 4.19 | 4.275 | 3.85 | 8" + 3/4 TURN | 7" + 3-3/4 TURNS | 4" | 6" |
| C900 PC305 (DR14, PC 200) | 4.80 | 4.70-4.90 | 2.40 | 4.02 | 4.275 | 3.85 | 8" + 3/4 TURN | 7" + 3-3/4 TURNS | 4" | 6" |
| | | | | | | | | | | |
| C.I. 50-250 PC | 4.80 | 4.70-4.90 | 2.40 | 4.10 | 4.275 | 3.85 | 8" + 2 TURNS | 7" + 5 TURNS | 4" | 6" |
| C.I. 50-250 PC | 4.80 | 4.70-4.90 | 2.40 | 4.00 | 4.00, 4.275 | 3.57, 3.85 | 8" + 2 TURNS | 7" + 5 TURNS | 4" | 6" |
| C.I. A | 4.80 | 4.70-4.90 | 2.40 | 3.96 | 4.00, 4.275 | 3.57, 3.85 | 8" + 2 TURNS | 7" + 5 TURNS | 4" | 6" |
| | | | | | | | | | | |
| C.I. B | 5.00 | 4.92-5.10 | 2.50 | 4.10 | 4.275 | 3.85 | 8" + 2 TURNS | 7" + 5 TURNS | 4" | 6" |
| C.I. C | 5.00 | 4.92-5.10 | 2.50 | 4.04 | 4.275 | 3.85 | 8" + 2 TURNS | 7" + 5 TURNS | 4" | 6" |
| C.I. D | 5.00 | 4.92-5.10 | 2.50 | 3.96 | 4.00, 4.275 | 3.57, 3.85 | 8" + 2 TURNS | 7" + 5 TURNS | 4" | 6" |
| | | | | | | | | | | |
| A.C. 100 | 4.92 | 4.91-5.10, 5.11-5.30 | 2.46 | 4.00 | 4.00, 4.275 | 3.57, 3.85 | 8" + 1-1/2 TURNS | 7" + 4-1/2 TURNS | 4" | 6" |
| A.C. 150 | 5.07 | 4.91-5.10, 5.11-5.30 | 2.54 | 4.00 | 4.00, 4.275 | 3.57, 3.85 | 8" + 2-1/2 TURNS | 7" + 5-1/2 TURNS | 4" | 6" |
| A.C. 200 | 5.33 | 5.11-5.30, 5.31-5.50 | 2.67 | 4.00 | 4.00, 4.275 | 3.57, 3.85 | 8" + 3-3/4 TURNS | 7" + 7 TURNS | 4" | 6" |
| | | | | | | | | | | |
| A.C. 150 CAPCO | 5.32 | 5.11-5.30, 5.31-5.50 | 2.66 | 4.00 | 4.00, 4.275 | 3.57, 3.85 | 8" + 3-3/4 TURNS | 7" + 7 TURNS | 4" | 6" |
| A.C. 200 CAPCO | 5.40 | 5.11-5.30, 5.31-5.50 | 2.7 | 4.00 | 4.00, 4.275 | 3.57, 3.85 | 8" + 4-1/2 TURNS | 7" + 8 TURNS | 4" | 6" |
| | | | | | | | | | | |
| SDR 26 (160) | 4.50 | 4.48 - 4.55 | 2.25 | 4.15 | 4.275 | 3.85 | 7" + 10-1/4 TURNS | 6" + 10-1/4 TURNS | 4" | 6" |
| SDR 21 (200) | 4.50 | 4.48 - 4.55 | 2.25 | 4.07 | 4.275 | 3.85 | 7" + 10-1/4 TURNS | 6" + 10-1/4 TURNS | 4" | 6" |
| PVC SCHEDULE 80 | 4.50 | 4.48 - 4.55 | 2.25 | 3.83 | 4.00, 4.275 | 3.57, 3.85 | 7" + 10-1/4 TURNS | 6" + 10-1/4 TURNS | 4" | 6" |
| PVC SCHEDULE 40 | 4.50 | 4.48 - 4.55 | 2.25 | 4.03 | 4.275 | 3.85 | 7" + 10-1/4 TURNS | 6" + 10-1/4 TURNS | 4" | 6" |

## 6" SIZE

| PIPE TYPE | O.D. NOM | SLEEVE SIZE | PIPE RADIUS | I.D. MIN. | CUTTER(S) | CUTTER I.D. | CUTTER TRAVEL | REAMER TRAVEL | VALVE ROTATE | VALVE SET |
|---|---|---|---|---|---|---|---|---|---|---|
| PC 350, D.I. 50 | 6.90 | 6.80-7.00 | 3.45 | 6.34 | 6.325 | 5.90 | 10" + 9 TURNS | 11" + 9 TURNS | 4" | 6" |
| D.I. 51 | 6.90 | 6.80-7.00 | 3.45 | 6.28 | 6.325 | 5.90 | 10" + 9 TURNS | 11" + 9 TURNS | 4" | 6" |
| D.I. 52 | 6.90 | 6.80-7.00 | 3.45 | 6.22 | 6.325 | 5.90 | 10" + 9 TURNS | 11" + 9 TURNS | 4" | 6" |
| D.I. 53 | 6.90 | 6.80-7.00 | 3.45 | 6.16 | 6.325 | 5.90 | 10" + 9 TURNS | 11" + 9 TURNS | 4" | 6" |
| D.I. 54 | 6.90 | 6.80-7.00 | 3.45 | 6.10 | 6.325 | 5.90 | 10" + 9 TURNS | 11" + 9 TURNS | 4" | 6" |
| D.I. 55 | 6.90 | 6.80-7.00 | 3.45 | 6.04 | 6.325 | 5.90 | 10" + 9 TURNS | 11" + 9 TURNS | 4" | 6" |
| D.I. 56 | 6.90 | 6.80-7.00 | 3.45 | 5.98 | 6.00, 6.325 | 5.57, 5.90 | 10" + 9 TURNS | 11" + 9 TURNS | 4" | 6" |
| | | | | | | | | | | |
| C900 PC165 (DR25, PC100) | 6.90 | 6.80-7.00 | 3.45 | 6.27 | 6.325 | 5.90 | 10" + 9 TURNS | 11" + 9 TURNS | 4" | 6" |
| C900 PC235 (DR18, PC150) | 6.90 | 6.80-7.00 | 3.45 | 6.03 | 6.325 | 5.90 | 10" + 9 TURNS | 11" + 9 TURNS | 4" | 6" |
| C900 PC305 (DR14, PC 200) | 6.90 | 6.80-7.00 | 3.45 | 5.79 | 6.00, 6.325 | 5.57, 5.90 | 10" + 9 TURNS | 11" + 9 TURNS | 4" | 6" |
| | | | | | | | | | | |
| C.I. A | 6.90 | 6.80-7.00 | 3.45 | 5.96 | 6.00, 6.325 | 5.57, 5.90 | 10" + 9 TURNS | 11" + 9 TURNS | 4" | 6" |
| | | | | | | | | | | |
| C.I. B | 7.10 | 7.01-7.20 | 3.55 | 6.08 | 6.325 | 5.90 | 10" + 10-1/4 TURNS | 11" + 10-1/4 TURNS | 4" | 6" |
| C.I. C | 7.10 | 7.01-7.20 | 3.55 | 6.02 | 6.325 | 5.90 | 10" + 10-1/4 TURNS | 11" + 10-1/4 TURNS | 4" | 6" |
| C.I. D | 7.10 | 7.01-7.20 | 3.55 | 5.94 | 6.00, 6.325 | 5.57, 5.90 | 10" + 10-1/4 TURNS | 11" + 10-1/4 TURNS | 4" | 6" |
| | | | | | | | | | | |
| A.C. 100 | 7.19 | 7.01-7.20, 7.21-7.40 | 3.6 | 6.00 | 6.00, 6.325 | 5.57, 5.90 | 10" + 10-3/4 TURNS | 11" + 10-1/4 TURNS | 4" | 6" |
| A.C. 150 | 7.17 | 7.01-7.20, 7.21-7.40 | 3.59 | 5.85 | 6.00, 6.325 | 5.57, 5.90 | 10" + 10-3/4 TURNS | 11" + 10-1/4 TURNS | 4" | 6" |
| | | | | | | | | | | |
| A.C. 200 | 7.32 | 7.21-7.40, 7.41-7.60 | 3.66 | 5.70 | 5.50, 6.00, 6.325 | 5.1, 5.57, 5.90 | 10" + 10-1/2 TURNS | 11" + 10-1/2 TURNS | 4" | 6" |
| | | | | | | | | | | |
| SDR 26 (160) | 6.63 | 6.61 - 6.68 | 3.32 | 6.12 | 6.325 | 5.90 | 10" + 6 TURNS | 11" + 6-1/2 TURNS | 4" | 6" |
| SDR 21 (200) | 6.63 | 6.61 - 6.68 | 3.32 | 5.99 | 6.325 | 5.90 | 10" + 6 TURNS | 11" + 6-1/2 TURNS | 4" | 6" |
| PVC SCHEDULE 80 | 6.63 | 6.61 - 6.68 | 3.32 | 5.76 | 6.00, 6.325 | 5.57, 5.90 | 10" + 6 TURNS | 11" + 6-1/2 TURNS | 4" | 6" |
| PVC SCHEDULE 40 | 6.63 | 6.61 - 6.68 | 3.32 | 6.07 | 6.325 | 5.90 | 10" + 6 TURNS | 11" + 6-1/2 TURNS | 4" | 6" |

ROMAC INDUSTRIES, INC.

1.800.426.9341 • www.romac.com

# QuikValve™ Travel Chart

## 8" SIZE

| PIPE TYPE | O.D. NOM | SLEEVE SIZE | PIPE RADIUS | I.D. MIN. | CUTTER(S) | CUTTER I.D. | CUTTER TRAVEL | REAMER TRAVEL | VALVE ROTATE | VALVE SET |
|---|---|---|---|---|---|---|---|---|---|---|
| PC 350, D.I. 50 | 9.05 | 8.95-9.15 | 4.53 | 8.45 | 8.425 | 8.00 | 11" + 9 TURNS | 11" + 9 TURNS | 3" + 3-1/2 TURNS | 5" + 3-1/2 TURNS |
| D.I. 51 | 9.05 | 8.95-9.15 | 4.53 | 8.39 | 8.425 | 8.00 | 11" + 9 TURNS | 11" + 9 TURNS | 3" + 3-1/2 TURNS | 5" + 3-1/2 TURNS |
| D.I. 52 | 9.05 | 8.95-9.15 | 4.53 | 8.33 | 8.425 | 8.00 | 11" + 9 TURNS | 11" + 9 TURNS | 3" + 3-1/2 TURNS | 5" + 3-1/2 TURNS |
| D.I. 53 | 9.05 | 8.95-9.15 | 4.53 | 8.27 | 8.425 | 8.00 | 11" + 9 TURNS | 11" + 9 TURNS | 3" + 3-1/2 TURNS | 5" + 3-1/2 TURNS |
| D.I. 54 | 9.05 | 8.95-9.15 | 4.53 | 8.21 | 8.425 | 8.00 | 11" + 9 TURNS | 11" + 9 TURNS | 3" + 3-1/2 TURNS | 5" + 3-1/2 TURNS |
| D.I. 55 | 9.05 | 8.95-9.15 | 4.53 | 8.15 | 8.425 | 8.00 | 11" + 9 TURNS | 11" + 9 TURNS | 3" + 3-1/2 TURNS | 5" + 3-1/2 TURNS |
| D.I. 56 | 9.05 | 8.95-9.15 | 4.53 | 8.09 | 8.00, 8.425 | 7.60, 8.00 | 11" + 9 TURNS | 11" + 9 TURNS | 3" + 3-1/2 TURNS | 5" + 3-1/2 TURNS |
| | | | | | | | | | | |
| C900 PC165 (DR25, PC100) | 9.05 | 8.95-9.15 | 4.53 | 8.23 | 8.425 | 8.00 | 11" + 9 TURNS | 11" + 9 TURNS | 3" + 3-1/2 TURNS | 5" + 3-1/2 TURNS |
| C900 PC235 (DR18, PC150) | 9.05 | 8.95-9.15 | 4.53 | 7.91 | 8.00, 8.425 | 7.60, 8.00 | 11" + 9 TURNS | 11" + 9 TURNS | 3" + 3-1/2 TURNS | 5" + 3-1/2 TURNS |
| C900 PC305 (DR14, PC 200) | 9.05 | 8.95-9.15 | 4.53 | 7.59 | 7.50, 8.00, 8.425 | 7.10, 7.60, 8.00 | 11" + 9 TURNS | 11" + 9 TURNS | 3" + 3-1/2 TURNS | 5" + 3-1/2 TURNS |
| | | | | | | | | | | |
| C.I. A | 9.05 | 8.95-9.15 | 4.53 | 8.07 | 8.00, 8.425 | 7.60, 8.00 | 11" + 9 TURNS | 11" + 9 TURNS | 3" + 3-1/2 TURNS | 5" + 3-1/2 TURNS |
| C.I. B | 9.05 | 8.95-9.15 | 4.53 | 7.97 | 8.00, 8.425 | 7.60, 8.00 | 11" + 9 TURNS | 11" + 9 TURNS | 3" + 3-1/2 TURNS | 5" + 3-1/2 TURNS |
| | | | | | | | | | | |
| C.I. C | 9.30 | 9.16-9.35, 9.36-9.55 | 4.65 | 8.12 | 8.425 | 8.00 | 11" + 10-1/2 TURNS | 11" + 10-1/2 TURNS | 3" + 3-1/2 TURNS | 5" + 3-1/2 TURNS |
| C.I. D | 9.30 | 9.16-9.35, 9.36-9.55 | 4.65 | 8.04 | 8.00, 8.425 | 7.60, 8.00 | 11" + 10-1/2 TURNS | 11" + 10-1/2 TURNS | 3" + 3-1/2 TURNS | 5" + 3-1/2 TURNS |
| | | | | | | | | | | |
| A.C. 100 | 9.39 | 9.16-9.35, 9.36-9.55 | 4.70 | 8.00 | 8.00, 8.425 | 7.60, 8.00 | 11" + 11 TURNS | 11" + 11 TURNS | 3" + 3-1/2 TURNS | 5" + 3-1/2 TURNS |
| A.C. 150 | 9.37 | 9.16-9.35, 9.36-9.55 | 4.69 | 7.85 | 8.00, 8.425 | 7.60, 8.00 | 11" + 11 TURNS | 11" + 11 TURNS | 3" + 3-1/2 TURNS | 5" + 3-1/2 TURNS |
| | | | | | | | | | | |
| A.C. 200 | 9.50 | 9.36-9.55, 9.56-9.75 | 4.75 | 7.60 | 7.50, 8.00, 8.425 | 7.10, 7.60, 8.00 | 11" + 11 TURNS | 11" + 11 TURNS | 3" + 3-1/2 TURNS | 5" + 3-1/2 TURNS |
| | | | | | | | | | | |
| SDR 26 (160) | 8.63 | 8.61-8.68 | 4.32 | 7.96 | 8.00, 8.425 | 7.60, 8.00 | 11" + 4 TURNS | 11" + 4 TURNS | 3" + 3-1/2 TURNS | 5" + 3-1/2 TURNS |
| SDR 21 (200) | 8.63 | 8.61-8.68 | 4.32 | 7.81 | 8.00, 8.425 | 7.60, 8.00 | 11" + 4 TURNS | 11" + 4 TURNS | 3" + 3-1/2 TURNS | 5" + 3-1/2 TURNS |
| PVC SCHEDULE 80 | 8.63 | 8.61-8.68 | 4.32 | 7.63 | 8.00, 8.425 | 7.60, 8.00 | 11" + 4 TURNS | 11" + 4 TURNS | 3" + 3-1/2 TURNS | 5" + 3-1/2 TURNS |
| PVC SCHEDULE 40 | 8.63 | 8.61-8.68 | 4.32 | 7.98 | 8.00, 8.425 | 7.60, 8.00 | 11" + 4 TURNS | 11" + 4 TURNS | 3" + 3-1/2 TURNS | 5" + 3-1/2 TURNS |

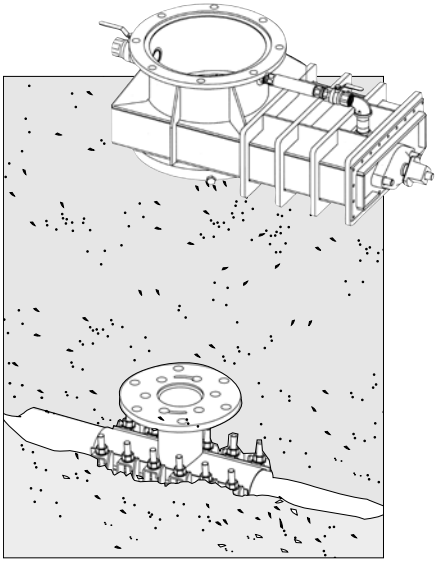

Bed pipe and sleeve. Prior to installing slide gate

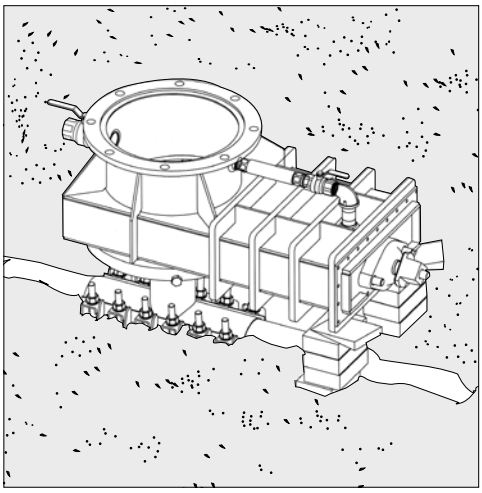

Once slide gate is secured to the flange - block slide gate for extra stability.

Transmate

**ROMAC INDUSTRIES, INC.**
21919 20th Avenue SE
Bothell, WA 98021

**Phone:** 425.951.6200
**Fax:** 425.951.6201

www.romac.com

*03/14/2017*